DocuSign Envelope ID: 2EDA1F6E-E7F4-4260-8250-649743424B5A

PROJECT REFERENCE NO.	SHEET NO.
17BP.14.R.130	2A-1
R/W SHEET NO.	
ROADWAY DESIGN ENGINEER	PAVEMENT DESIGN ENGINEER
NORTH CAROLINA PROFESSIONAL SEAL 26960 ENGINEER Docusigned by: Kevin W. Schuler 12/7/2016	NORTH CAROLINA PROFESSIONAL SEAL 20134 ENGINEER Docusigned by: Robert M. Craig 12/7/2016

DOCUMENT NOT CONSIDERED FINAL UNLESS ALL SIGNATURES COMPLETED

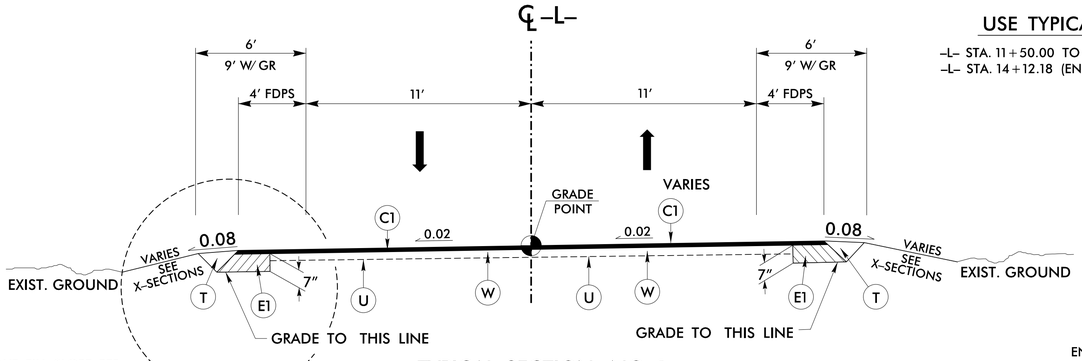

NOTE: PAVE FILL SLOPE PER WEDGING DETAIL FROM –L– STA. 11+50.00 TO –L– STA. 13+74.81

SEE INSET A AND INSET B

TYPICAL SECTION NO. 1

USE TYPICAL SECTION NO. 1

–L– STA. 11+50.00 TO STA. 13+74.81 (BEGIN BRIDGE)
–L– STA. 14+12.18 (END BRIDGE) TO STA. 15+00.00

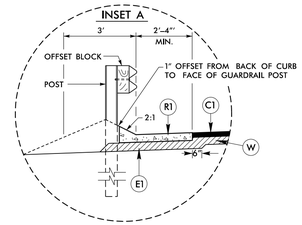

USE INSET A

END APPROACH SLAB LT TO –L– STA. 14+35.39 LT

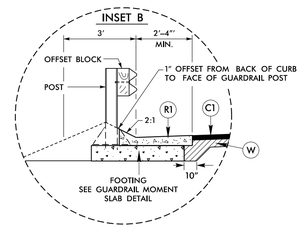

USE INSET B

–L– STA. 14+35.39 LT TO –L– STA. 14+42.00 LT

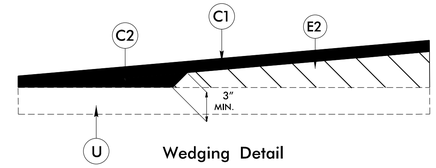

Wedging Detail

PAVEMENT SCHEDULE	
C1	PROP. APPROX. 3″ ASPHALT CONCRETE SURFACE COURSE, TYPE S9.5B, AT AN AVERAGE RATE OF 168 LBS. PER SQ. YD. IN EACH OF TWO LAYERS.
C2	PROP. VAR. DEPTH ASPHALT CONCRETE SURFACE COURSE, TYPE S9.5B, AT AN AVERAGE RATE OF 112 LBS. PER SQ.YD. PER 1″ DEPTH. TO BE PLACED IN LAYERS NOT TO EXCEED 2″ IN DEPTH.
E1	PROP. APPROX. 4″ ASPHALT CONCRETE BASE COURSE, TYPE B25.0B, AT AN AVERAGE RATE OF 456 LBS. PER SQ. YD.
E2	PROP. VAR. DEPTH ASPHALT CONCRETE BASE COURSE, TYPE B25.0B, AT AN AVERAGE RATE OF 114 LBS. PER SQ.YD. PER 1″ DEPTH. TO BE PLACED IN LAYERS NOT LESS THAN 3″ IN DEPTH OR GREATER THAN 5½″ IN DEPTH.
R1	SHOULDER BERM GUTTER (NCDOT STD. DWG. 846.01)
T	EARTH MATERIAL
U	EXISTING PAVEMENT
W	PROPOSED WEDGING (SEE APPROPRIATE DETAILS)
DRAWING NOT TO SCALE	

NOTE: PAVEMENT EDGE SLOPES ARE 1:1 UNLESS SHOWN OTHERWISE.

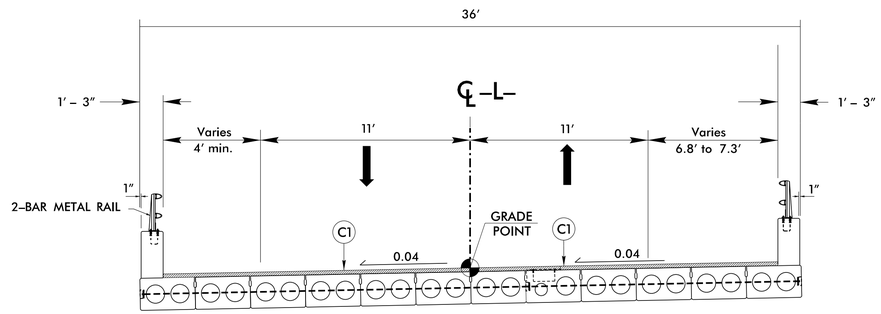

TYPICAL SECTION NO. 2

USE TYPICAL SECTION NO. 2

–L– STA. 13+74.81 (BEGIN BRIDGE) TO
–L– STA. 14+12.18 (END BRIDGE)

GUARDRAIL MOMENT SLAB DETAIL

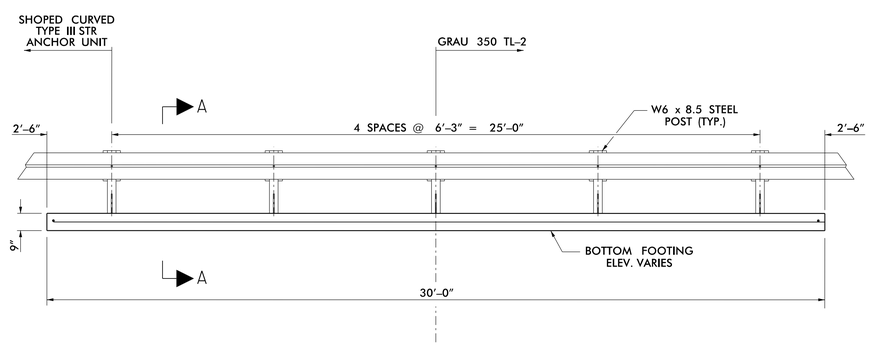

END ELEVATION

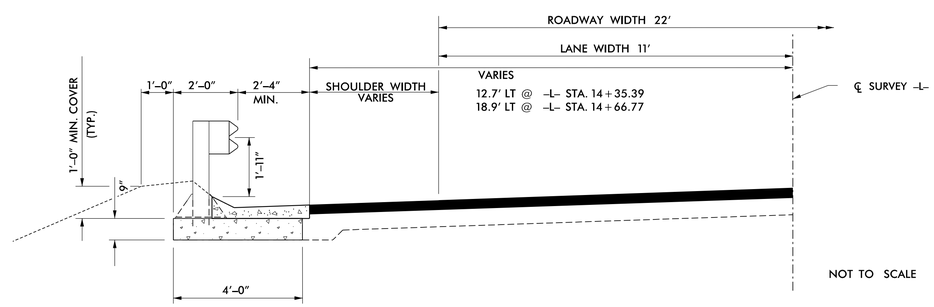

NOT TO SCALE

NOTE: FOR GUARDRAIL ANCHORAGE TO FOOTING DETAILS SEE NCDOT STD. DWG. 862.03, SHEET 7 OF 7.

SECTION A-A

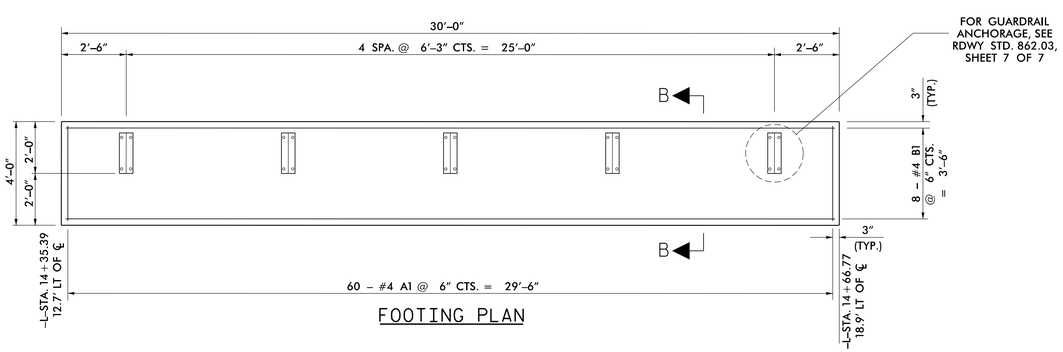

FOOTING PLAN

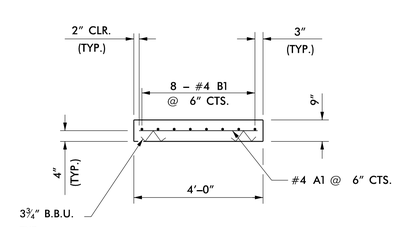

SECTION B-B

BILL OF MATERIAL FOR ONE FOOTING					
BAR	NO.	SIZE	TYPE	LENGTH	WEIGHT
A1	60	4	STR.	3′-8″	147
B1	8	4	STR.	29′-8″	159
REINFORCING STEEL LBS. =					306
CLASS A CONCRETE CU. YDS. =					3.3

DRAWINGS NOT TO SCALE

8/17/99
12/6/2016
12:17:09 pm
C:\Users\Public\Documents\Transportation\31235-01 14W Graham 11\Roadway\Proj\17BP.14.R.130_Rdy_typ.dgn